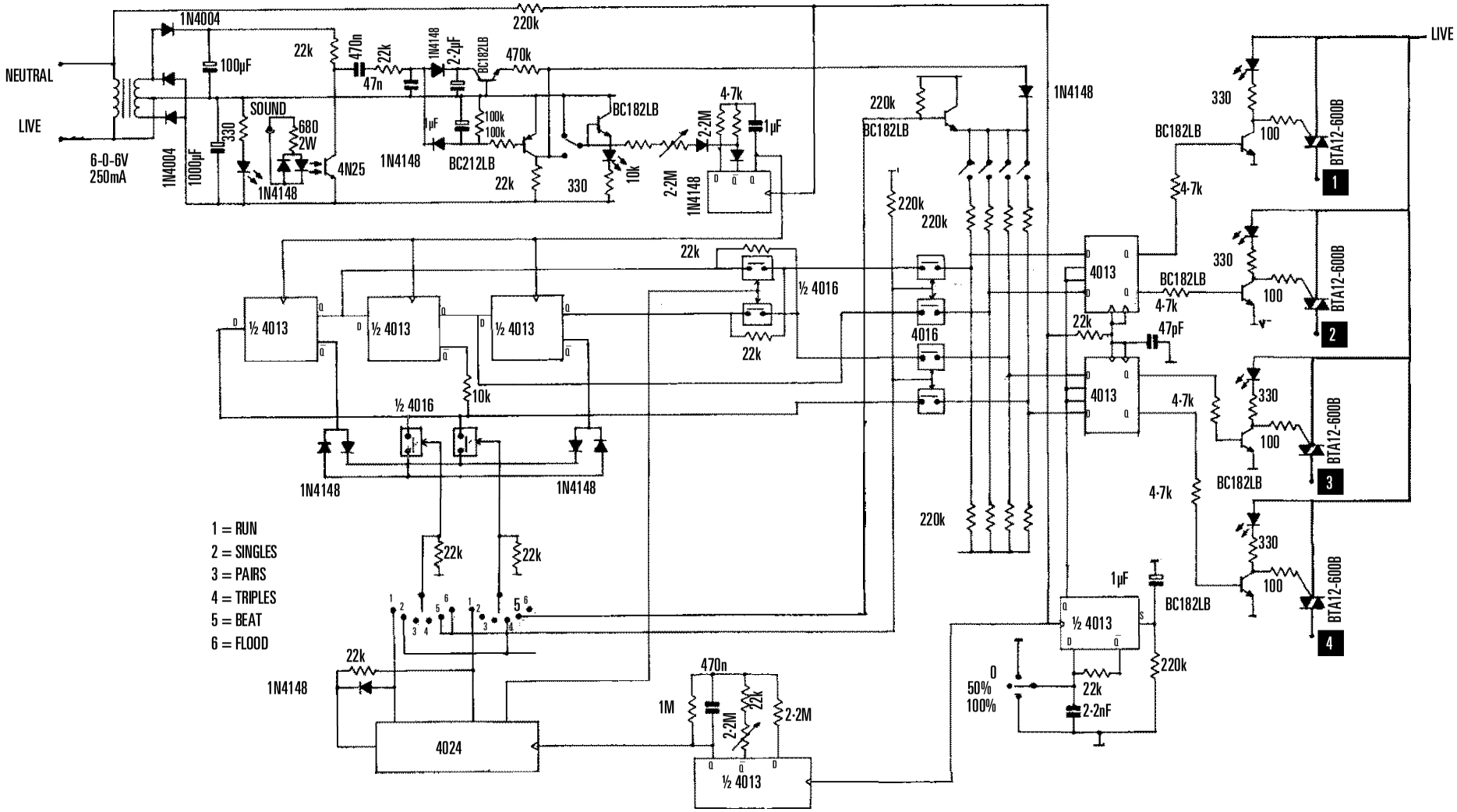

WARNING: All parts of this circuit are at mains live potential

LOGIC 4000

© N.J.D. Electronics 1980.